Dimensões em polegada
Dimensions in inches

THIS IS AN UPDATED REVISION, THE PREVIOUS ONE MUST BE DISREGARDED.

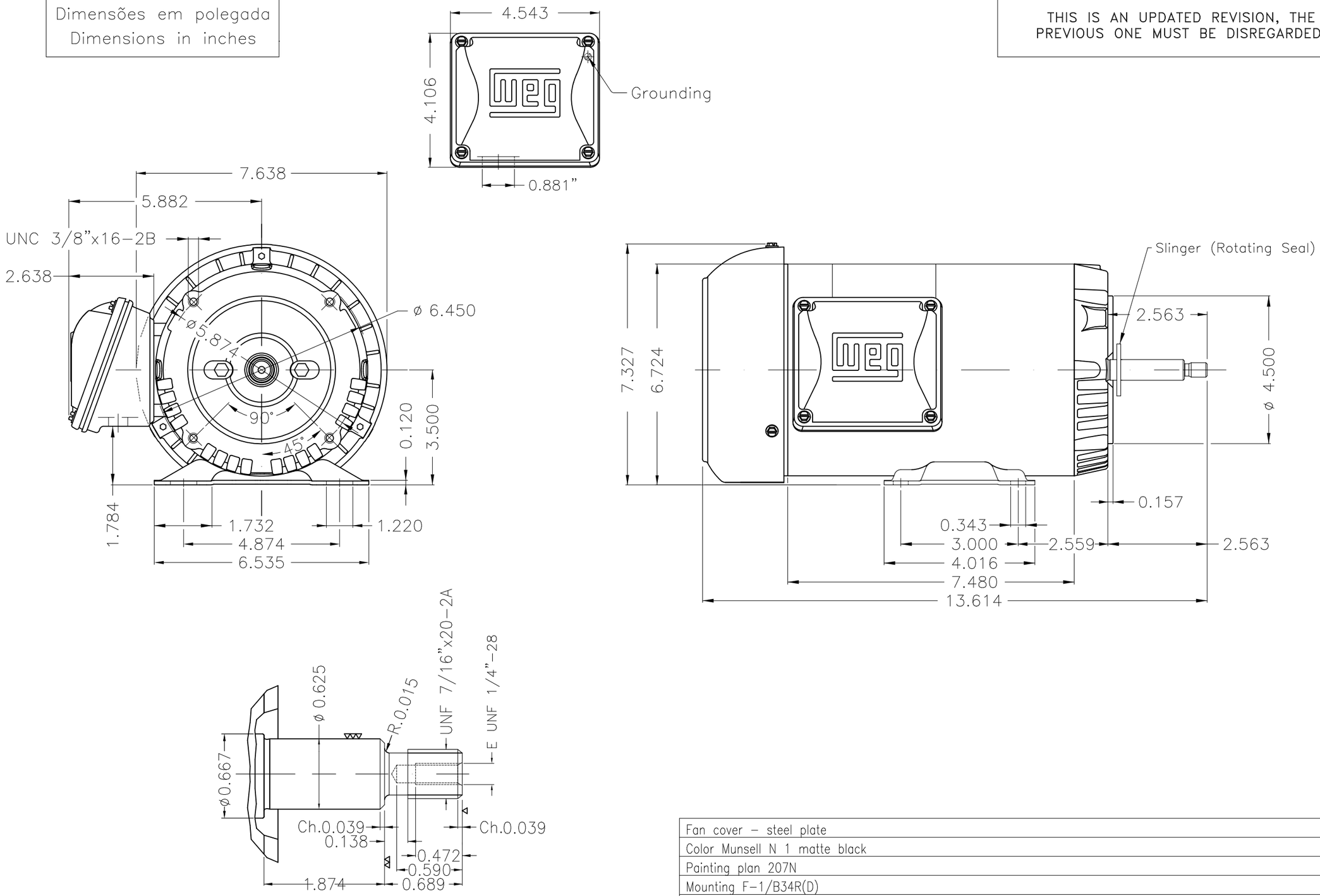


Fan cover – steel plate
Color Munsell N 1 matte black
Painting plan 207N
Mounting F-1/B34R(D)

| ECM | LOC | SUMMARY OF MODIFICATIONS | EXECUTED | CHECKED | RELEASED | DATE | VER |
|---|---|---|---|---|---|---|---|

| | | | | |
|---|---|---|---|---|
| EXECUTED | USERADMIN | THREE PHASE MOTOR CLOSED ROLLED STEEL | | |
| CHECKED | | FRAME 56J IP55 TEFC | | |
| RELEASED | | JET PUMP \| WEG code: 14804535 | | |
| REL DT | 01.09.2020 | WMO | Jaragua do Sul | Product Engineering | SHEET 1 / 1 |

1.5 HP 02 Poles 60Hz

A

ZME A3

WEG's property. Forbidden reproduction without previous authorization.